Hi Tech Honda

NAYI

Shine 100 DX

SOLID HAI

NAYI

Shine 100 DX

The new Shine 100 DX, powered by Honda's renowned eSP technology, comes with solid tech, mileage, style, and comfort.
Digital Meter,wide fuel tank,tubeless tyres, stylish chrome plating, 5-step adjustable suspension and all-new striking graphics, make it solid for every road and ride.

SOLID TECHNOLOGY

Engineered for performance, precision, and efficiency—discover the advanced tech inside that makes every ride smoother, smarter, and more reliable.

DIGITAL METER

A fully digital meter engineered for efficient precision that provides a data-driven riding experience.

- **Real-Time Display Of Mileage**
- **Range**
- **Average Mileage**
- **Digital Clock**
- **Service Reminder**

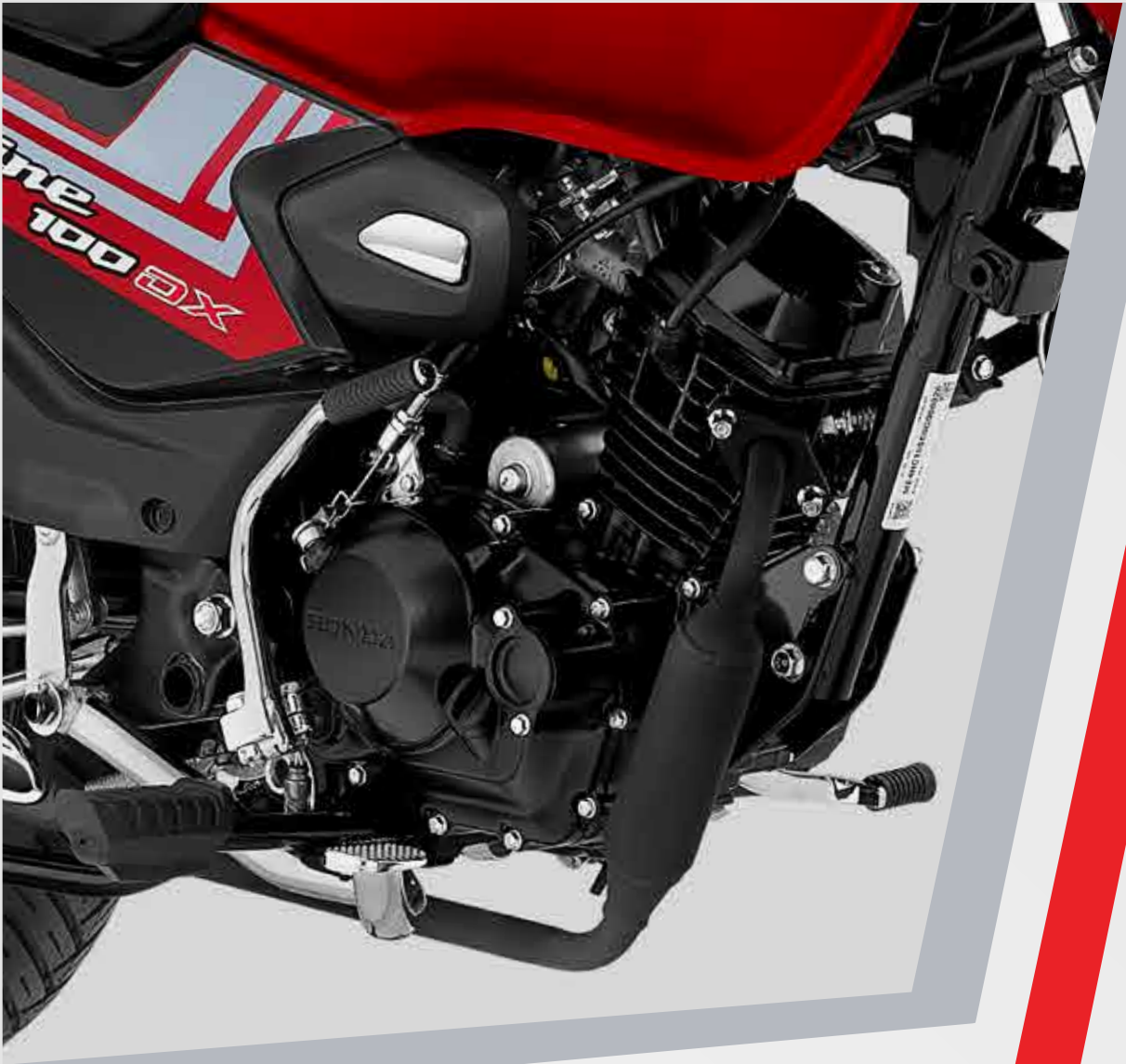

100CC EFFICIENT Honda VERTICAL ENGINE

Engine which ensures superb performance and reliability with great fuel efficiency.

eSP TECHNOLOGY

Ensures top-notch performance and fuel efficiency by minimising friction

PGM-FI

It is a sensor-based advanced system that ensures constant optimum fuel delivery to the engine, depending upon the riding conditions, which allows efficient combustion and lesser emissions.

REDUCED FRICTION

Minimised friction and continuous ideal engine temperature maintained by piston cooling jet, offset cylinder, and rocker roller arm working together.

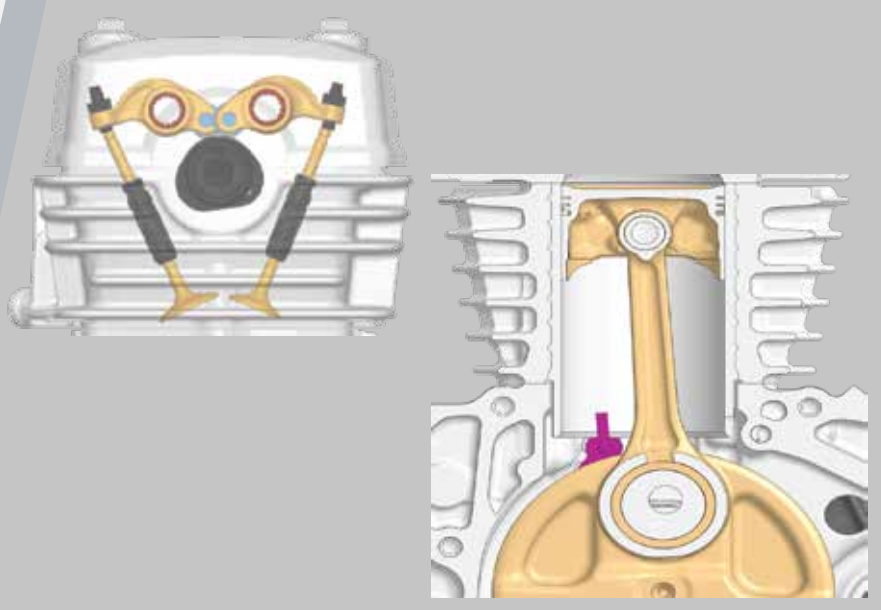

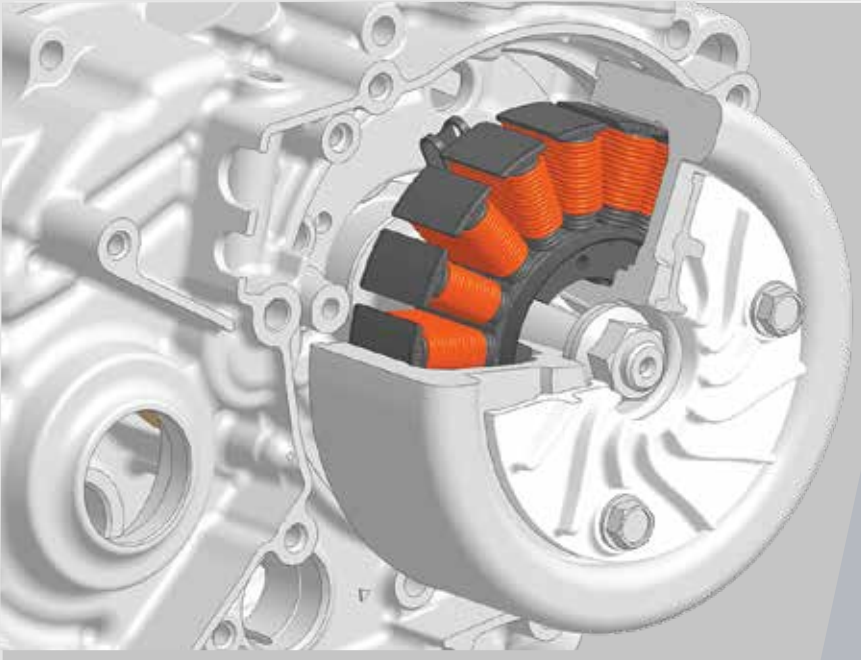

SILENT ACG STARTER

Honda’s advanced ACG starter motor eliminates gear meshing noise, ensuring a seamless start.

SOLID STYLE

Make a lasting impression from every angle. With striking graphics, chrome accents, and elegant design elements, the Shine 100 DX delivers truly Solid Style.

WIDE FUEL TANK

Reimagined tank designed with aero-type fuel cap for sharper look. Built for those who ride for pride.

STRIKING GRAPHICS

All-new, dynamic graphics give a magnificent look

STYLISH CHROME FINISH

The Shine 100 DX's stylish chrome garnished muffler, handlebar, kick arm, visor, and gear shift paddle makes you stand out in every crowd.

AERODYNAMIC FRONT COWL

The front cowl and powerful headlight- give the bike an attractive appearance.

Honda LOGO

The brand name of Honda that reflects the trust.

ELEGANT TAIL LAMP

A bright and elegant tail lamp gives the bike an imposing look from the back.

SOLID COMFORT

Built for peace of mind and everyday ease, this ride offers rock-solid comfort through smart safety features, superior suspension, and a posture-perfect seat for all journeys.

Honda
EXTENDED WARRANTY
10 YEAR* COVERAGE

3+7 YEARS WARRANTY PACKAGE

*Attractive 10 years warranty package, comprising 3 years standard and 7 years optional service warranty.

HIGH GROUND CLEARANCE WITH LONG WHEELBASE

Makes the motorcycle stable at higher speeds and on rough roads, giving confidence to the riders.

SUPERB SUSPENSION DYNAMICS

A perfect 5-step adjustable suspension setup makes riding on every road a breeze.

LONG & COMFORTABLE SEAT

Long journeys made easy with longer and more comfortable seating with awesome ergonomics.

COMFORTABLE RIDING POSTURE

For both rider and pillion, along with great load carrying capability.

EASY GROUND TOUCH WITH OPTIMISED SEAT HEIGHT

Riders can easily be flat-footed with an optimum seat height that enhances comfort.

SOLID SAFETY

Built for real-world safety, this motorcycle offers solid grip, agile control, and dependable performance-ensuring confident rides with premium looks and strength across every terrain.

ALLOY WHEELS WITH TUBELESS TYRES

The stylish alloy wheels for the premium touch and the tubeless tyres ensure smooth rides and enhanced grip.

EFFICIENT CBS BRAKING

Reduce braking distance for ultimate riding confidence, powered by the Combi-Brake System with Equaliser.

SIDE STAND ENGINE INHIBITOR

Adds to the rider's safety by cutting off the ignition when the vehicle is in gear but the side stand is engaged.

STRONG GRAB RAIL

For added pillion safety and enhanced practicality.

Shine 100 DX

Technical Specification*

Body Dimensions

Length	1955 mm
Width	754 mm
Height	1050 mm
Wheel Base	1245 mm
Ground Clearance	168 mm
Kerb Weight	103 kg
Seat Length	677 mm
Seat Height	786 mm
Fuel Tank Capacity	10.0 L

Engine

Type	4 Stroke, SI Engine
Displacement	98.98 cc
Max Engine Output	5.43 kW @7500 rpm
Max Torque	8.04 N-m @ 5000 rpm
Fuel System	PGM - FI
Bore X Stroke	47.0 X 57.049 mm
Compression Ratio	10.0:1
Starting Method	Self/Kick start

Transmission

Clutch Type	Multiplate Wet Clutch
No. of Gears	4 Gear

Tyres & Brakes

Tyre size & Type (Front)	2.75 -17 M/C 41P, Tubeless
Tyre size & Type (Rear)	3.00 - 17 M/C 50P, Tubeless
Brake Type & Size (Front)	Drum - 130 mm
Brake Type & Size (Rear)	Drum - 110 mm

Frame & Suspension

Frame Type	Diamond Type
Front Suspension	Telescopic
Rear Suspension	Twin (5-Step Adjustable)

Electricals

Battery	12V, 3.0Ah
Head Lamp	Halogen Bulb, DC

*The technical specifications and design of the vehicle may vary according to the requirements and conditions without any notice.
All features may not be part of all variants. Terms and conditions apply.

ATTRACTIVE COLORS

IMPERIAL RED METTALIC

PEARL IGNEOUS BLACK

GENY GRAY METALLIC

ATHLETIC BLUE METALLIC

Hi Tech Honda
Highway Road
Mehsana
Tel: 98251 87252
Mob: 98258 52879

Honda Motorcycle and Scooter India Pvt. Ltd.

Registered Office: Plot No. 1 , Sector - 03, IMT Manesar, Distt. Gurugram, (Haryana) – 122050, India

For more details:

Visit us at: www.honda2wheelersindia.com | Customer Care: customercare@honda.hmsi.in

Follow us at :

honda2wheelers.in honda2wheelerin honda2wheelersin honda2wheelerin